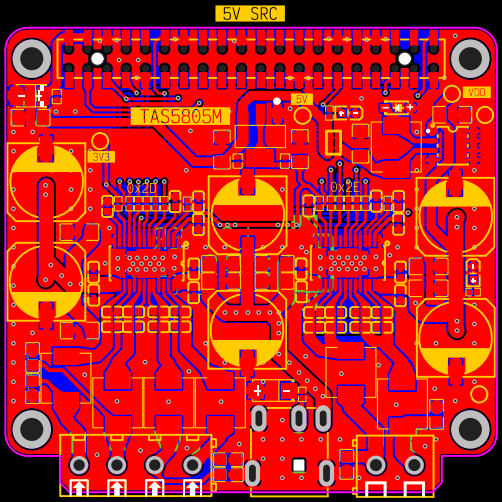
5V SRC
TAS5805M
5V
3V3
VDD